SYSTEM WIRING DIAGRAMS
Headlight Washer/Wiper Circuit
1995 Mercedes-Benz E420
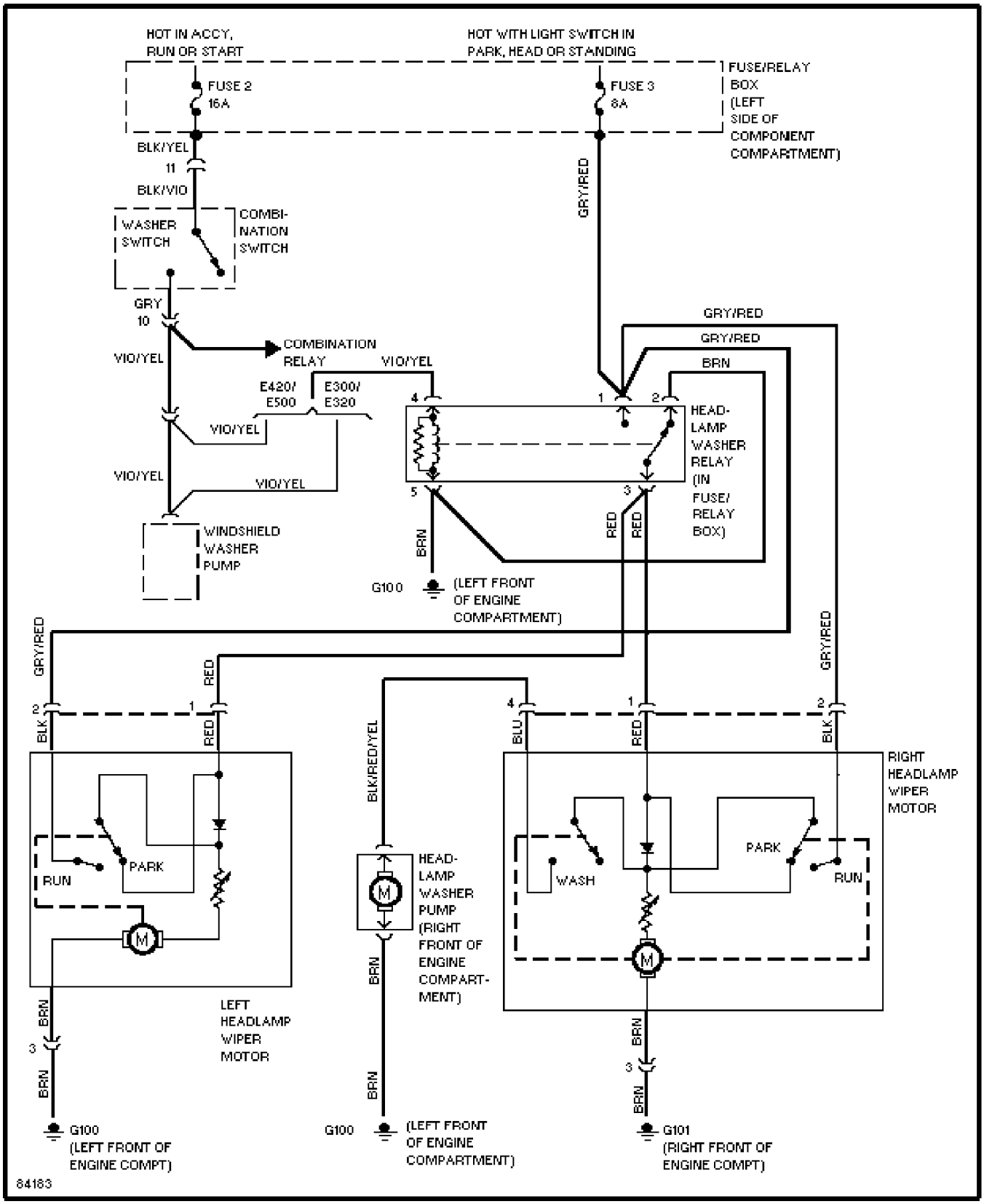
For DIAKOM-AUTO http://www.diakom.ru Taganrog support@diakom.ru (8634)315187
Copyright © 1998 Mitchell Repair Information Company, LLC
Monday, December 04, 2000 12:20PM